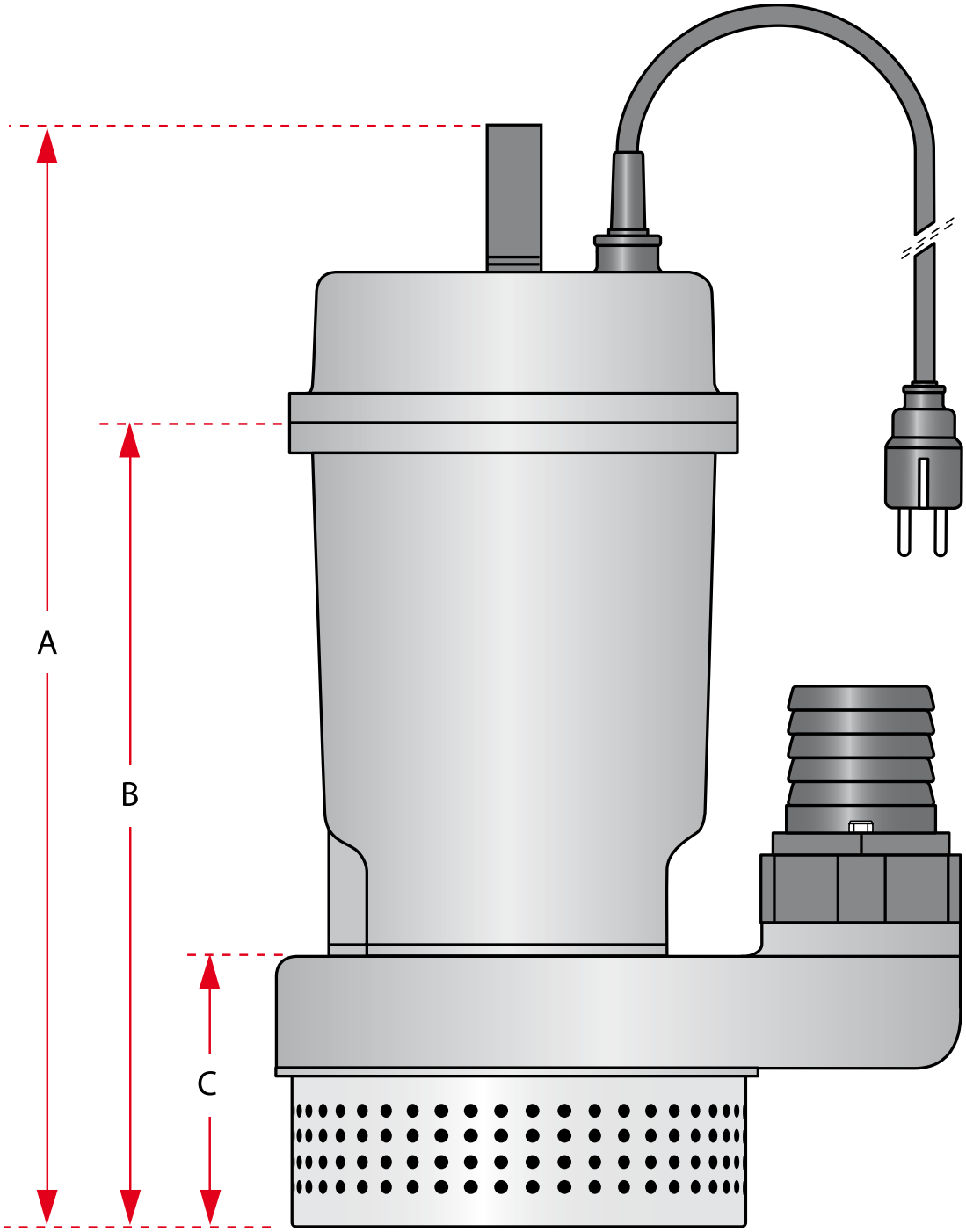

Type	A	B	C
KO 204 S	377	275	95

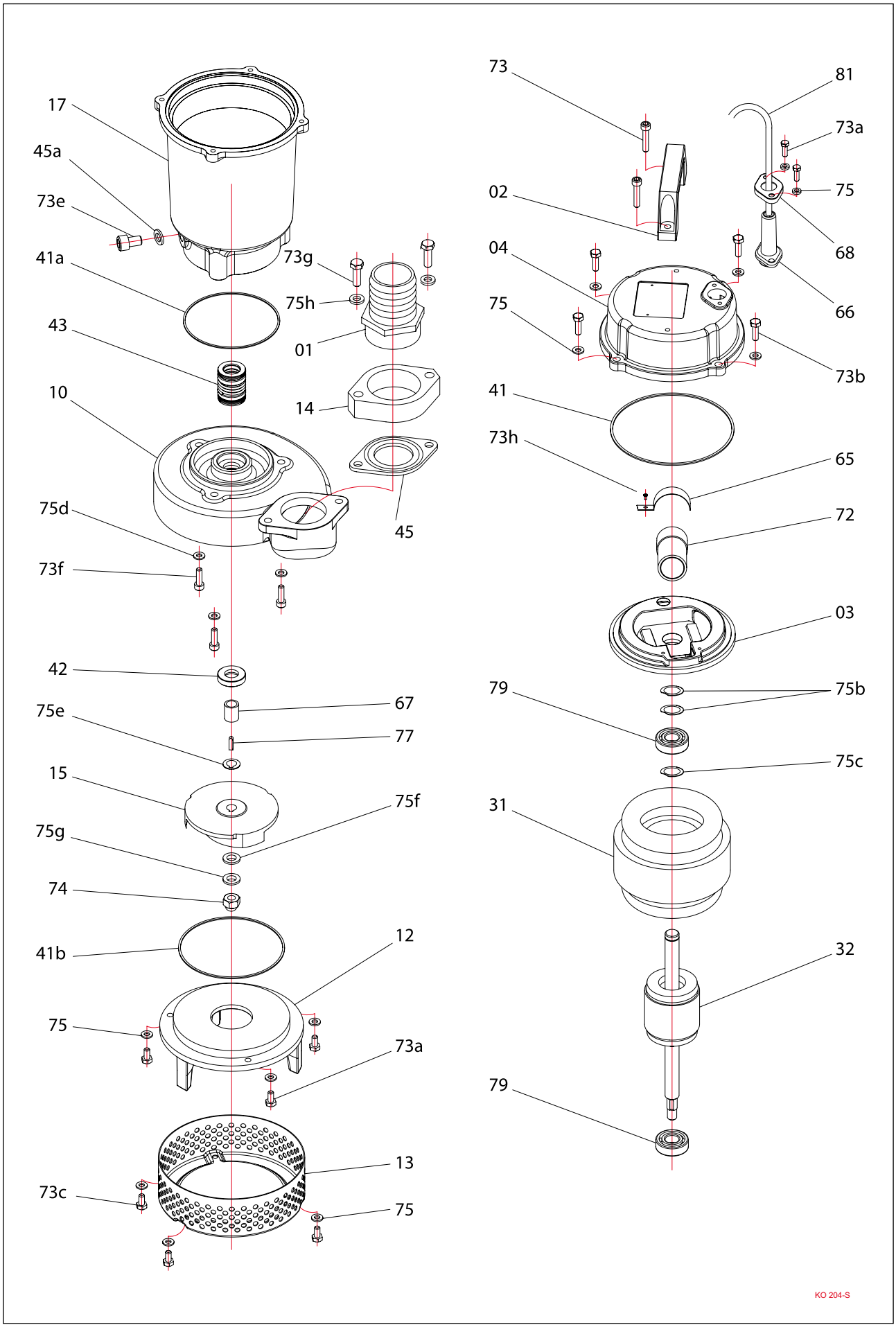
17
45a
73e
41a
43
10
75d
73f
42
75e
15
75g
74
41b
75
73c
73g
75h
01
14
45
67
77
75f
12
73a
13
75
73
02
04
75
41
73h
81
73a
75
68
66
73b
65
72
03
79
75b
75c
31
32
79
KO 204-S

KO 204 S

Index	Code NO	Description	Q'ty	Size	Material
01	01010611	Discharge head	1	2"	Thermal plastic
02	02012	Handle	1		Thermal plastic
03	0336KO-0075-01	Switch plate	1		FC-20
04	0436KO-0040	Upper cover	1		FC-20
10	1036KO-0040	Pump casing	1		FC-20
12	1236KO-0040	Inlet plate	1		FC-20
13	13435505006	Strainer	1	5.5MM*50*154	SUS-304
14	1436061A	Flange	1	2"	FC-20
15	1536KO-0075100	Impeller	1	100*20* 3*11	FC-20
17	1736125180	Moter frame	1	125*180H	FC-20
31	311240204E3-A	Stator	1	125*60*40L 230V	
32	321KO-0040	Shaft/Rotor (without Bearing)	1	125*60*40L	
41	411035-01	O'ring	1	3.5MM*133	N-70
41a	411031-15	O'ring	1	3.1MM*90	N-70
41b	411026-01	O'ring	1	2.62MM*120	N-70
42	4214316-02	Oil seal	1	15MM-30*5	SUS-304
43	432214-4	Mech. seal	1	Double 14-4 CE/CA VS CE/CA	
45	455FS-007510	Gasket	1		N-70
45a	459010	Gasket	1		N-70
65	65312	Shim	1	57MM	
66	66715090	Cable gland	1		
67	674315-01	Shaft sleeve	1	15MM*11*1.05T	SUS-304
68	66815070	Gland holder	1		SUS-304
72	721350015	Capacitor	1	350V*15UF	
73	73433060201	Screw	2	Round cross M6*20	SUS-304
73a	73431050161	Screw	5	Flat hex. M5*16	SUS-304
73b	73431050201	Screw	4	Flat hex. M5*20	SUS-304
73c	73431080351	Screw	2	Flat hex. M8*35	SUS-304
73d	73303040121	Screw	2	Round cross M4*12	SC
73e	73432100161	Screw	1	Socket hex. M10*16	SUS-304
73f	73432060161	Screw	3	Socket hex. M6*16	SUS-304
73g	73303040081	Screw	1	Round cross M4*8	SC
73h	73431050121	Screw	3	Flat hex. M5*12	SUS-304
74	7424310	Nut	1	M10	SUS-304
75	753430005-01	Spring washer	12	M5	SUS-304
75a	752300004-01	Washer	2	M4	SC
75b	751306202	Wave washer	2	6202	SC
75c	752306202-01	Washer	1	6202	SC
75d	753430006-01	Spring washer	3	M6	SUS-304
75e	755430012-01	Washer	2	M12	SUS-304
75f	752430010-01	Washer	1	M10	SUS-304
75g	753430010-01	Spring washer	1	M10	SUS-304
75h	752430008-01	Washer	2	M8*19*1.1T	SUS-304
77	772431-01	Key	1	4*4*10	SUS-304
79	79362021	Bearing	2	6202	
81	81081031004142	Cable	1	H07RN-F 1.0*3C*10M	
Remarks					
		O'ring & Gasket sets	1		