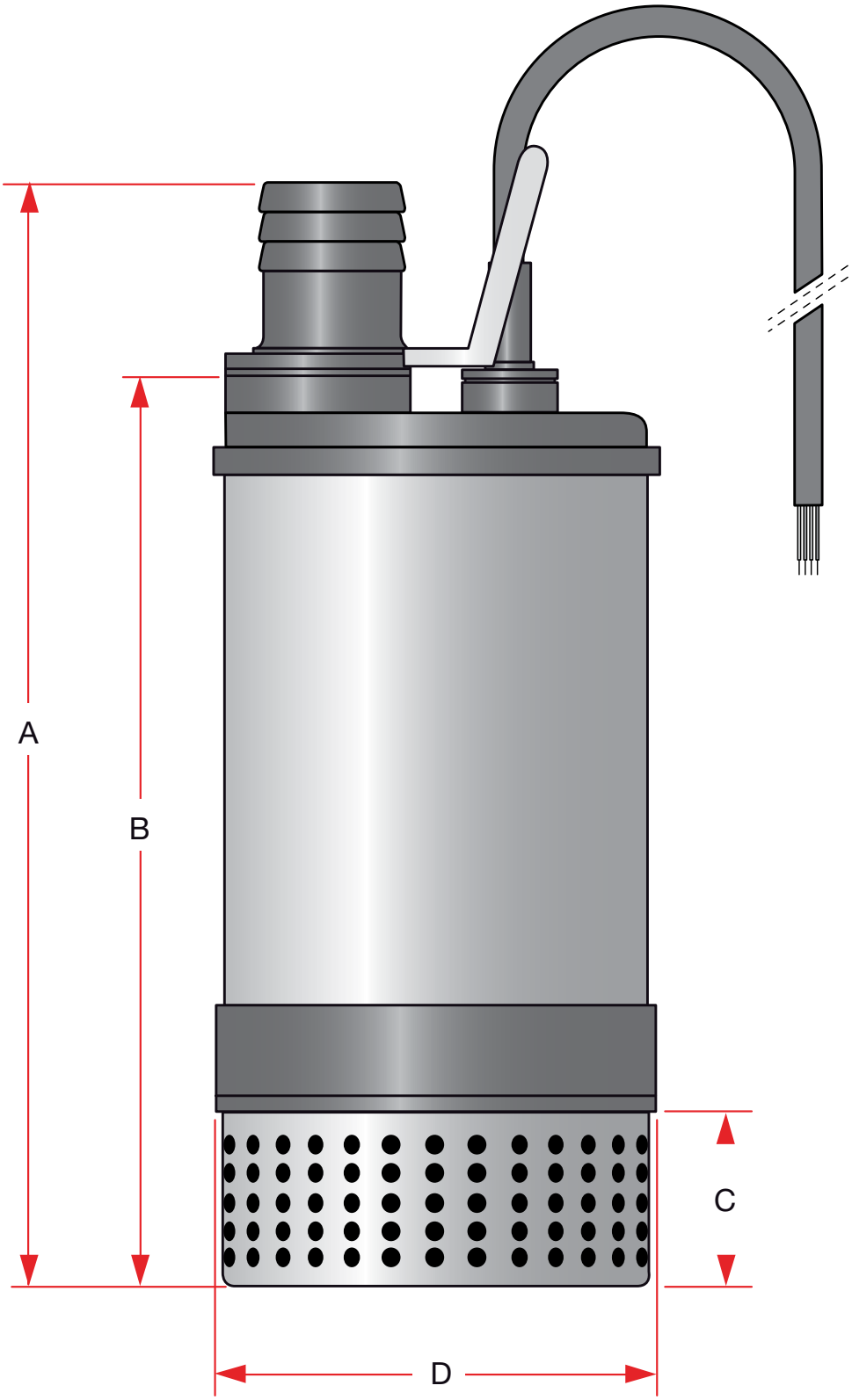

Type	A	B	C	D
FS 337 N	601	496	95	240

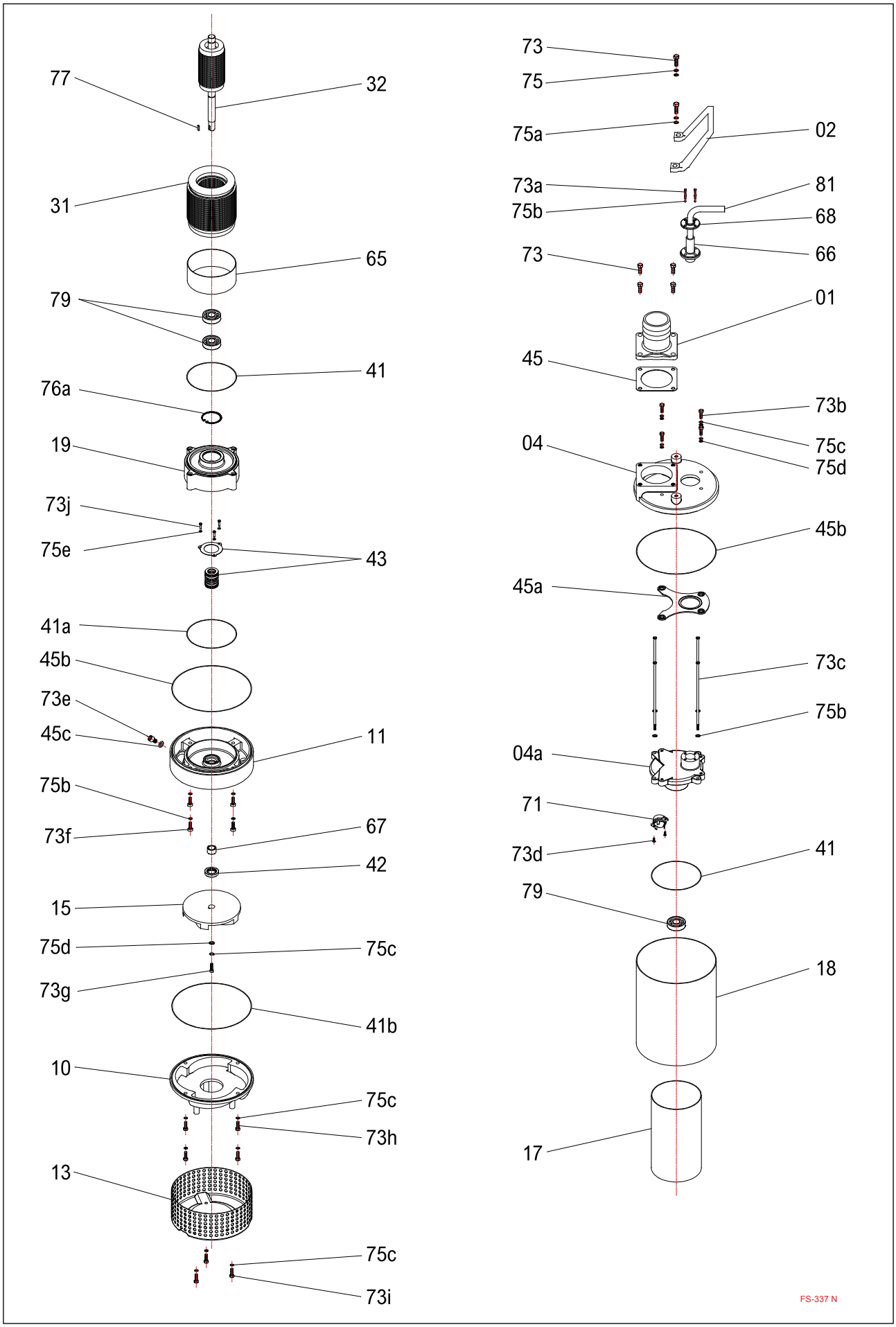
77
32
31
65
79
41
76a
19
73j
75e
43
41a
45b
73e
45c
11
75b
73f
67
42
15
75d
75c
73g
41b
10
75c
73h
13
75c
73i
73
75
75a
02
73a
81
75b
68
73
66
01
45
73b
75c
04
75d
45b
45a
73c
75b
04a
71
73d
41
79
18
17
FS-337 N

FS 337 N

Index	Code NO	Description	Q'ty	Size	Material
01	01360741-2	Discharge head	1	3"	FC-20
02	02303	Handle	1		SC
04	0436FS0375NF	Upper cover	1		FC-20
04a	0436FS0375N	Motor cover	1		FC-20
10	1036FS0375NA	Pump casing	1		FC-20
11	1136FS0375N	Seal bracket	1		FC-20
13	13430908009	Strainer	1		SUS-304
15	1541FS-0375N170	Impeller	1	150*5*20	HCR
17	1743140255	Motor frame	1	140*255H*2T	SUS-304
18	1843FS-0225	Outer case	1	226*289H	SUS-304
19	1936FS0375N	Bearing bracket	1		FC-20
31	313440311F6	Stator	1	140*75*110L	
32	323FS0375N	Shaft/Rotor without Bearing	1	75*110L	
41	411026-04	O'ring	2	2.62MM*139.3	N-70
41a	411031-06	O'ring	1	3.1MM*144.4	N-70
41b	411031-04	O'ring	1	3.1MM*220	N-70
42	4214325-01	Oil seal	1	25MM-40*8	SUS-304
43	432220-01	Mech.seal	1	ED*560*M20	
45	455FS-022510	Gasket	1		N-70
45a	451FS0375N10	Gasket	1		N-70
45b	456FS-022510	Gasket	2		N-70
45c	459010	Gasket	1		N-70
65	6531160B	Shim	1	60H*1T*438L	SC
67	674325-01	Shaft sleeve	1	25MM*18*20H	SUS-304
71	7128-04	Thermal protector	1	KA313 GCWN103	
73	73431100301	Screw	6	Flat hex. M10*30	SUS-304
73a	73432060161	Screw	4	Socket hex. M6*16	SUS-304
73b	73431080251	Screw	4	Flat hex. M8*25	SUS-304
73c	73436062851	Screw	4	Flat hex. M6*285L	SUS-304
73d	73433040121	Screw	2	Cross M4*12	SUS-304
73e	73432100161	Screw	1	Socket hex. M10*16	SUS-304
73f	73432060351	Screw	4	Socket hex. M6*35	SUS-304
73g	73432080201	Screw	1	Socket hex. M8*20	SUS-304
73h	73431080301	Screw	4	Flat hex. M8*30	SUS-304
73i	73431080201	Screw	3	Flat hex. M8*20	SUS-304
73j	73431050121	Screw	3	Flat hex. M5*12	SUS-304
75	753430010-01	Spring washer	2	M10 3/8"	SUS-304
75a	752430010-01	Washer	2	M10*22*1T	SUS-304
75b	753430006-01	Spring washer	12	M6 1/4"	SUS-304
75c	753430008-01	Spring washer	12	M8 5/16"	SUS-304
75d	752430008-01	Washer	5	M8*19*1.1T	SUS-304
75e	753430005-01	Spring washer	3	M5 3/16"	SUS-304
76	7630RTW52	C'ing	1		SUS-304
77	771432-01	Key	1		SUS-304
79	79363041	Bearing	3	6304	
81	8108154200132-1	Cable	1		
81a	811401	Earth lead	1		